PHYS101/Fall 2012-2013 Final

PHYSICS NO: _____

NAME: _____

(On my honor I have neither given nor received any unauthorized assistance on this exam.)

- This exam is for **180** minutes and has six problems (Check this now carefully.)
- This is a closed-book/notes/calculator/laptop exam.
- Read the questions carefully and write down your solutions in the space provided **neatly** and **clearly**. Write down your final results in the boxes at the end of each question.
- A formula sheet is provided for you.
- Answers without work shown will not be given any credit.

(Leave blank)

Problem 1	Problem 2	Problem 3	Total
Problem 4	Problem 5	Problem 6	

Formula Sheet

Scalar Product:

$c = \vec{A} \cdot \vec{B} = A_x B_x + A_y B_y + A_z B_z$

$c = AB \cos\phi$

Vector Product:

$\vec{C} = \vec{A} \times \vec{B}$

$C = AB \sin\phi$

$C_x = A_y B_z - A_z B_y$

$C_y = A_z B_x - A_x B_z$

$C_z = A_x B_y - A_y B_x$

Straight-line motion:

$$v_{av-x} = \frac{x_2 - x_1}{t_2 - t_1} = \frac{\boldsymbol{\Delta x}}{\boldsymbol{\Delta t}}$$

$$v_x = \lim_{\Delta t \to 0} \frac{\boldsymbol{\Delta x}}{\boldsymbol{\Delta t}} = \frac{dx}{dt}$$

$$a_{av-x} = \frac{v_{2x} - v_{1x}}{t_2 - t_1} = \frac{\boldsymbol{\Delta v_x}}{\boldsymbol{\Delta t}}$$

$$a_x = \lim_{\Delta t \to 0} \frac{\boldsymbol{\Delta v_x}}{\boldsymbol{\Delta t}} = \frac{dv_x}{dt}$$

Constant x-acceleration:

$v_x = v_{0x} + a_x t$

$x = x_0 + v_{0x} t + \frac{1}{2} a_x t^2$

$v_x^2 = v_{0x}^2 + 2a_x(x - x_0)$

$x - x_0 = \left(\frac{v_{0x} + v_x}{2}\right) t$

Motion in three dimensions:

$\vec{r} = x\hat{\imath} + y\hat{\jmath} + z\hat{k}$

$$\vec{v}_{av} = \frac{\vec{r}_2 - \vec{r}_1}{t_2 - t_1} = \frac{\boldsymbol{\Delta \vec{r}}}{\boldsymbol{\Delta t}}$$

$$\vec{v} = \lim_{\Delta t \to 0} \frac{\boldsymbol{\Delta \vec{r}}}{\boldsymbol{\Delta t}} = \frac{d\vec{r}}{dt}$$

$$\vec{a}_{av} = \frac{\vec{v}_2 - \vec{v}_1}{t_2 - t_1} = \frac{\boldsymbol{\Delta \vec{v}}}{\boldsymbol{\Delta t}}$$

$$\vec{a} = \lim_{\Delta t \to 0} \frac{\boldsymbol{\Delta \vec{v}}}{\boldsymbol{\Delta t}} = \frac{d\vec{v}}{dt}$$

Circular motion:

$$a_{\text{rad}} = \frac{v^2}{R} \quad a_{\text{rad}} = \frac{4\pi^2 R}{T^2}$$

Relative velocity:

$v_{\text{P/A-}x} = v_{\text{P/B-}x} + v_{\text{B/A-}x}$

$\vec{v}_{\text{P/A}} = \vec{v}_{\text{P/B}} + \vec{v}_{\text{B/A}}$

Newton's 1st Law:

$\vec{R} = \vec{F}_1 + \vec{F}_2 + \ldots = \sum \vec{F}$

$\sum \vec{F} = 0$

Newton's 2nd Law:

$\sum \vec{F} = m\vec{a}$

Newton's 3rd Law:

$\vec{F}_{\text{A on B}} = -\vec{F}_{\text{B on A}}$

Friction Force:

$f_k = \mu_k n \quad f_s \leq \mu_s n$

$\sin 36.9^\circ = \cos 53.1^\circ = 0.6$

$\sin 53.1^\circ = \cos 36.9^\circ = 0.8$

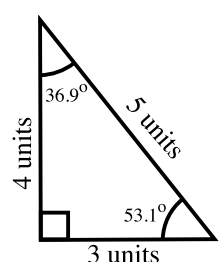

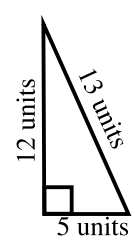

Note: If you detach this page during the exam, return it at the end with your exam sheet after you have signed below.

Signature:

Formula Sheet

Scalar Product:

$c = \vec{A} \cdot \vec{B} = A_x B_x + A_y B_y + A_z B_z$

$c = AB \cos\phi$

Vector Product:

$\vec{C} = \vec{A} \times \vec{B}$

$C = AB \sin\phi$

$C_x = A_y B_z - A_z B_y$

$C_y = A_z B_x - A_x B_z$

$C_z = A_x B_y - A_y B_x$

Straight-line motion:

$$v_{av-x} = \frac{x_2 - x_1}{t_2 - t_1} = \frac{\boldsymbol{\Delta x}}{\boldsymbol{\Delta t}}$$

$$v_x = \lim_{\Delta t \to 0} \frac{\boldsymbol{\Delta x}}{\boldsymbol{\Delta t}} = \frac{dx}{dt}$$

$$a_{av-x} = \frac{v_{2x} - v_{1x}}{t_2 - t_1} = \frac{\boldsymbol{\Delta v_x}}{\boldsymbol{\Delta t}}$$

$$a_x = \lim_{\Delta t \to 0} \frac{\boldsymbol{\Delta v_x}}{\boldsymbol{\Delta t}} = \frac{dv_x}{dt}$$

Constant x-acceleration:

$v_x = v_{0x} + a_x t$

$x = x_0 + v_{0x} t + \frac{1}{2} a_x t^2$

$v_x^2 = v_{0x}^2 + 2a_x(x - x_0)$

$$x - x_0 = \left(\frac{v_{0x} + v_x}{2}\right) t$$

Motion in three dimensions:

$\vec{r} = x\hat{\imath} + y\hat{\jmath} + z\hat{k}$

$$\vec{v}_{av} = \frac{\vec{r}_2 - \vec{r}_1}{t_2 - t_1} = \frac{\boldsymbol{\Delta \vec{r}}}{\boldsymbol{\Delta t}}$$

$$\vec{v} = \lim_{\Delta t \to 0} \frac{\boldsymbol{\Delta \vec{r}}}{\boldsymbol{\Delta t}} = \frac{d\vec{r}}{dt}$$

$$\vec{a}_{av} = \frac{\vec{v}_2 - \vec{v}_1}{t_2 - t_1} = \frac{\boldsymbol{\Delta \vec{v}}}{\boldsymbol{\Delta t}}$$

$$\vec{a} = \lim_{\Delta t \to 0} \frac{\boldsymbol{\Delta \vec{v}}}{\boldsymbol{\Delta t}} = \frac{d\vec{v}}{dt}$$

Circular motion:

$$a_{\text{rad}} = \frac{v^2}{R} \quad a_{\text{rad}} = \frac{4\pi^2 R}{T^2}$$

Relative velocity:

$v_{\text{P/A-}x} = v_{\text{P/B-}x} + v_{\text{B/A-}x}$

$\vec{v}_{\text{P/A}} = \vec{v}_{\text{P/B}} + \vec{v}_{\text{B/A}}$

Newton's 1st Law:

$\vec{R} = \vec{F}_1 + \vec{F}_2 + \ldots = \sum \vec{F}$

$\sum \vec{F} = 0$

Newton's 2nd Law:

$\sum \vec{F} = m\vec{a}$

Newton's 3rd Law:

$\vec{F}_{\text{A on B}} = -\vec{F}_{\text{B on A}}$

Friction Force:

$f_k = \mu_k n \quad f_s \leq \mu_s n$

Work done by a force:

$W = \vec{F} \cdot \vec{s} = Fs \cos\phi$

Kinetic energy:

$K = \frac{1}{2} m v^2$

The work-energy theorem:

$W_{\text{tot}} = K_2 - K1 = \Delta K$

Work done by a varying force:

$$W = \int_{x_1}^{x_2} F_x \, dx$$

Power:

$$P_{\text{av}} = \frac{\Delta W}{\Delta t}$$

$P_{\text{av}} = \vec{F} \cdot \vec{v}$

Gravitational and elastic pot. energy:

$W_{\text{grav}} = mgy_1 - mgy_2$

Note: If you detach this page during the exam, return it at the end with your exam sheet after you have signed below.

Signature:

Formula Sheet

Momentum of a particle:

$\vec{p} = m\vec{v}$

$\sum \vec{F} = \frac{d\vec{p}}{dt}$

Impulse:

$\vec{J} = \sum \vec{F}\Delta t$

$\vec{J} = \vec{p}_2 - \vec{p}_1$

$W_{\text{el}} = \frac{1}{2}kx_1^2 - \frac{1}{2}kx_2^2$

Conservation of mech. energy:

$K_1 + U_1 + W_{\text{other}} = K_2 + U_2$

Determining force from potential:

$\vec{F} = -\left(\frac{\partial U}{\partial x}\hat{\imath} + \frac{\partial U}{\partial y}\hat{\jmath} + \frac{\partial U}{\partial z}\hat{k}\right)$

Conservation of momentum:

$\vec{P} = \vec{p}_A + \vec{p}_B + \ldots$

Elastic collision:

$v_{B2x} = \frac{2m_A}{m_A + m_B} v_{A1x}$ (assuming $v_{B1x} = 0$)

Center of mass:

$\vec{r}_{\text{cm}} = \frac{m_1\vec{r}_1 + m_2\vec{r}_2 + \ldots}{m_1 + m_2 + \ldots}$

Rotational kinematics:

$\omega_z = \frac{d\theta}{dt}$

$\alpha_z = \frac{d\omega_z}{dt}$

$\theta = \theta_0 + \omega_0 t + \frac{1}{2}\alpha_z t^2$

$v = r\omega$

$a_{\text{tan}} = r\alpha$

$a_{\text{rad}} = \frac{v^2}{r} = \omega^2 r$

Torque:

$\vec{\tau} = \vec{r} \times \vec{F}$

Rotational dynamics:

$\sum \tau_z = I\alpha_z$

$K = \frac{1}{2}Mv_{\text{cm}}^2 + \frac{1}{2}I_{\text{cm}}\omega^2$

Rolling without slipping:

$v_{\text{cm}} = R\omega$

Periodic motion:

$f = \frac{1}{T}, \quad \omega = 2\pi f$

Simple harmonic motion:

Spring: $F_x = -kx, \quad \omega = \sqrt{\frac{k}{m}}$

$x = A\ \cos(\omega t + \phi)$

Simple pendulum: $\omega = \sqrt{\frac{g}{L}}$

Damped oscillations:

$x = Ae^{(-b/2m)t}\ \cos(\omega' t + \phi)$

$\omega' = \sqrt{\frac{k}{m} - \frac{b^2}{4m^2}}$

Mechanical waves:

$v = \lambda f = \omega/k$

$y(x,t) = A\ \cos(kx - \omega t)$

$k = 2\pi/\lambda,\ \omega = 2\pi f = v$

Note: If you detach this page during the exam, return it at the end with your exam sheet after you have signed below.

Signature:

Conceptual Question (1) (5 points)
An object of mass m is rotating around a fixed axis as shown in the figure. Explain how angular momentum changes with respect to the angular displacement θ.

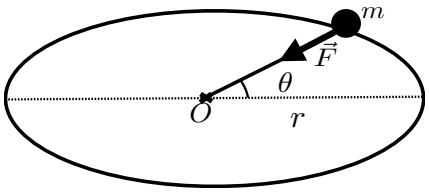

Conceptual Question (1) (5 points)
A 3.0-kg rifle fires a 5.0-g bullet at a speed of 300 m/s. Which object (bullet or rifle) is applied a greater (a) force (b) impulse (c) change in momentum (d) change in kinetic energy?

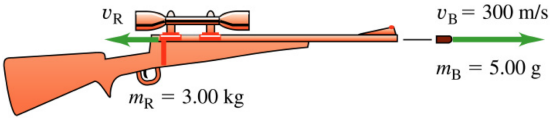

Conceptual Question (1) (5 points)
Two spheres of the same size and mass roll down an incline, starting from rest. Sphere A has most of its mass concentrated at the rim, while sphere B has most of its mass concentrated at the center. Which one reaches the bottom first? Explain.

Problem (1) (25 points)
A body is released from the top of a frictionless plane inclined by angle θ, and at the same instant another body is projected upward from the bottom of the plane with such a speed v_0 that the two bodies meet halfway up the plane. The length of the plane is l and its height is h.

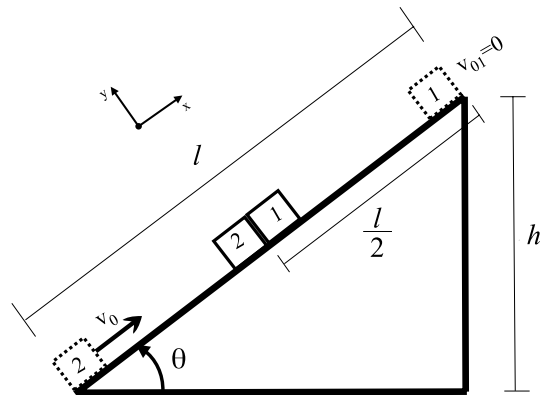

(a) (10 pts.) Find the speed v_0 which the body 2 is projected with, in terms of gravitational acceleration g and h.

$v_0 =$

(b) (10 pts.) Find the speed of each body when they meet, in terms of g and h.

$v_1^{final} =$

$v_2^{final} =$

(c) (5 pts.) Draw the x vs. t and v_x vs. t graphs for each body choosing the x axis along the plane and the bottom of the plane as the origin.

Problem (2) (25 points)
A block with mass $m_2 = 1.0$ kg is tied to the wall with a rope. It sits on another block with mass $m_1 = 1.5$ kg which sits on the floor. The lower block is pulled to the right with a force of $F = 22.0$ N. The coefficient of kinetic friction between all surfaces is $\mu_k = 0.50$. ($g = 10$ m/s^2)

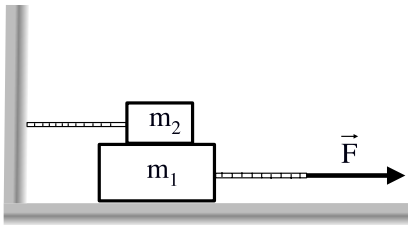

(a) (8 pts.) Draw the free body diagrams for each block.

(b) (7 pts.) What is the tension in the rope between the upper block and the wall?

$T=$

(c) (10 pts.) What is the acceleration of the lower block?

$a=$

Problem (3) (25 points)

Two small objects of masses M and $3M$ stand on a horizontal, frictionless surface. A massless spring of equilibrium length L with force constant k is attached to one of them, and the objects are pushed together compressing the spring by a distance $L/2$. Assume the object of mass M is initially at the origin of the x-axis. The system is then released from rest. Find:

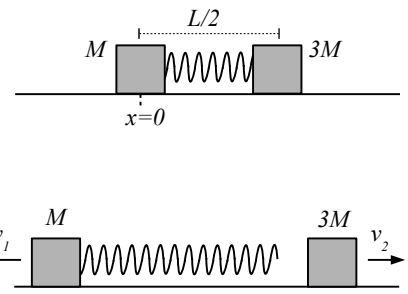

(a)(15 pts.) the final velocities of the blocks in terms of L, M and k;

$v_1=$

$v_2=$

(b)(10 pts.) the position of the center of mass as a function of time.

$x_{CM}(t)=$

Problem (4) (25 points)

A uniform rod of mass M and length L is released from its horizontal position. The rod pivots about a fixed frictionless axis at one end and rotates counterclockwise due to gravity. It collides and **sticks** to another rod with same length and mass which is vertically at rest.

(For a rod with mass M and length L, the moment of inertia about an axis through its one end is given by $I = \frac{1}{3}ML^2$)

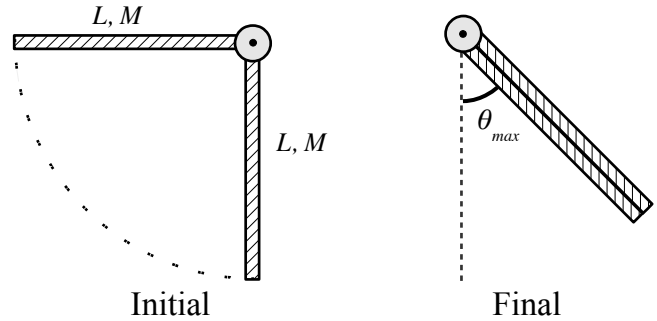

(a)(5 pts.) Find the angular speed of the incoming rod **just before** the collision.

$\omega_1 =$

(b)(7 pts.) Find the angular velocity of two rods **just after** the collision.

$\omega_2 =$

(c)(13 pts.) Find the maximum angular displacement from the vertical.

$\theta_{max} =$

Problem (5) (25 points)
On a frictionless, horizontal air track, a glider oscillates at the end of an ideal spring of force constant 2.50 N/cm. The graph in the figure shows the acceleration of the glider as a function of time. Find: (You may leave π terms as π.)

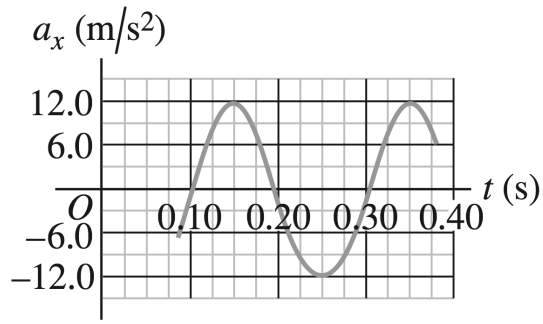

(a)(10 pts.) the mass of the glider;

$m=$

(b)(10 pts.) the maximum displacement of the glider from the equilibrium point;

$A=$

(c)(5 pts.) the maximum force the spring exerts on the glider.

$F_{max}=$